Original Study

Journal of Veterinary Dentistry
2021, Vol. 38(2) 75-80

DOI: 10.1177/0898756421044940
journals.sagepub.com/home/jov
SAGE

Correlation of Fracture Resistance of Dental Implants and Bite Force in Dogs described in the literature: An *In Vitro* Study

Jaime Sarda Aramburú[1,2], Sergio Alexandre Gehrke[2], Berenice Anina Dedavid[3], Tiago Luis Eilers Treichel[4], and Ney Luis Pippi[1]

Abstract

Dental implants are not routinely used for rehabilitation in veterinary dentistry. For some veterinarians, further studies are necessary to be considered for clinical use in animals. The objective of the present *in vitro* study was to evaluate static fatigue of dental implants and to correlate that with the bite strength of dogs described in the literature. Sixty implants and abutments were used with the smallest diameter of each brand of implant utilized in the study. Three groups ($n = 20$) were created on the basis of the implant diameter, all with external hex connector: 3.30 mm (group 1), 4.0 mm (group 2) and 5.0 mm (group 3). All groups were subjected to quasi-static loading at 30° to the implant's long axis in a universal machine (model AME-5 kN). The mean fracture strength for group 1 was 964 ± 187 N, for group 2 was 1618 ± 149 N and for group 3 was 2595 ± 161 N. Significant differences between the groups with respect to resistance after the load applications were observed ($P < .05$). The diameter of implants affects the resistance to external forces during the application of non-axial strength (off-axis loading) and must be considered during the planning of rehabilitation to avoid problems.

Keywords

animal rehabilitation, dental implants, fracture mode, fracture strength, bite force, dog, *in vitro*

Introduction

Oral health care which until recently was exclusively confined to human patients, has become routine for animals. However, many times, tooth loss due to infection, injury or malformation can hinder their function and/or aesthetic appearance.[1] Dental implant usage has become routine and a reliable treatment modality in humans, and dog studies have been reported in the literature to better understand human implant use. Use in animals is not a novel concept and is an option for replacement of damaged or lost teeth.[2,3]

The advances in dental implants afforded the possibility of rehabilitating patients with different types of tooth loss (single or multiple) and thereby improving their function. Currently, the use of dental implants is a reality, because a great evolution of knowledge and improvements in clinical technique have resulted in high long-term clinical success rates. Long-term studies report a success rate of over 90%.[4] Most of the advances and knowledge acquired in dental implantology were obtained in animal studies.[5-8] However, a group of prominent veterinary dentists published an opinion piece that describes factors that may contraindicate the use of dental implants in dogs and cats, include a lack of proper hygiene, surgical risks, and treatment costs.[9] In addition to those reasons, a major problem that must be considered is the difficulty in determining the masticatory strength of these patients. This may vary widely from dog to dog, as overload may result in loss of osseointegration or fracture of the implant.[10,11] Therefore, the objective of this study was to evaluate the *in vitro* resistance of titanium dental implants and to correlate with the data of masticatory force reported in the literature for small animals.

Materials and Methods

Experimental Groups

Sixty dental implants and 60 abutments were manufactured in commercially pure (CP) grade IV titanium, with external hex connection. Three implant diameters were used in the final analysis: Ø3.30 mm (group 1), 4.0 mm (group 2) and 5.0 mm (group 3) (Implacil De Bortoli Materiais Odontológico Ltda, São Paulo, Brazil). All implants were 13 mm in length (Figure 1).

[1]Universidade Federal de Santa Maria, Rio Grande do Sul, Brazil
[2]Biotecnos, Montevideo, Uruguay
[3]Pontifiica Universidade católica do Rio Grande do Sul, Porto Alegre, Brazil
[4]Universidade de Rio Verde, Rio Verde, Goiás, Brazil

Corresponding Author:
Dr Jaime Sardá Aramburú Junior, Rua Dr Bozano, 571 - 97015-001 -Santa Maria (RS) –Brazil.
Email: jaimearamburujunior@gmail.com

Figure 1. Implants used in this study. Diameter of each of these three implants is 3.3mm (left), 4.0mm (middle) and 5.0mm (right).

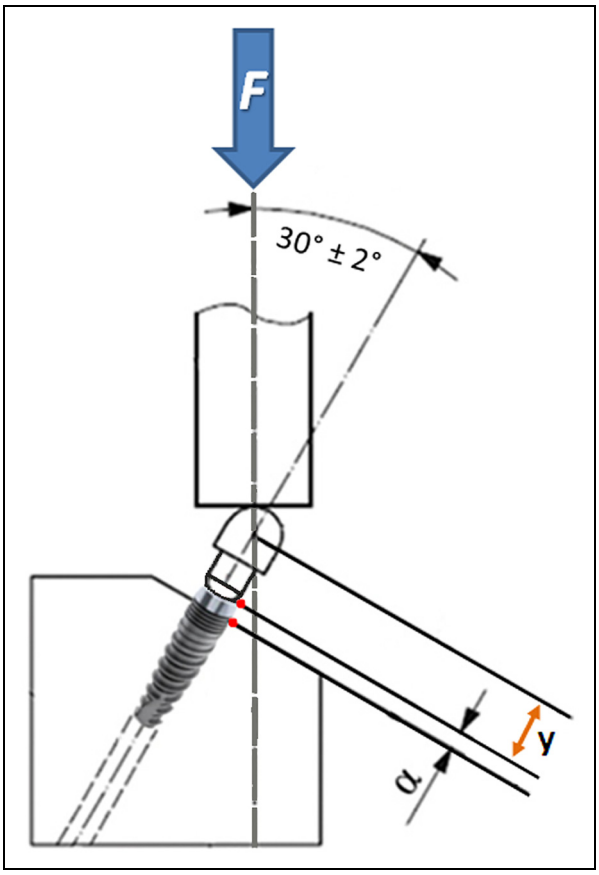

Figure 2. Scheme used in the compression test, based on ISO 14801/2007 standards.12 The distance α was 3 mm, corresponding to the implant without insertion. The distance y was respected in all samples (y = 10 mm).

Mechanical Assay

Test implants were loaded with quasi-static compressive forces, according to previously described guidelines.[12] These guidelines recommend embedding the implant in epoxy resin (Polipox Resin - extra rígida, Polipox Ind. e Com. Ltda, São Paulo, Brazil) with the cervical part of implant body placed at 3 mm above surface level, simulating various marginal bone levels. The epoxy resin had a Young's modulus of elasticity similar to cortical bone, which was found to have an elastic modulus of 20 GPa.[13] The implants were positioned with an angulation of 30° with respect to the applied load (Figure 2). For each group, twenty implant/abutment sets were used. The abutments were placed onto the implants and fixated with a screw with the same final height. All screws received a final torque of 32 N using an analog torque gauge (BTG 60 CN—S, Tohnichi, Tokyo, Japan), as recommended by the product manufacturer. Metal hemisphere was elaborated with the design recommended by the standard ISO,[12] and cemented (Cimento de Zinco S.S. White, São Paulo, Brazil) on the abutment to simulate a dental crown. All samples were subjected to quasi-static off-axis loading until fracture resulted in the implant abutment complex using a properly calibrated universal testing machine (model AME-5kN, Técnica Industrial Oswaldo Filizola Ltda, Guarulhos, Brazil) with a test capacity of 5.0 kN. The test speed was set at 1 mm/min, similar to previous studies conducted by our team.[11,14] Tests were conducted at the Testing Laboratory of Biomechanics (Biotecnos, Santa Maria, Brazil).

Statistical Analysis

After the quasi-static loading test, all fractured samples were ultrasonically cleaned in 96% isopropanol and observed under low-power magnification. The images were taken using a digital stereomicroscopy of the surface (Cnoec, Opto-Edu, Beijing, China) in two magnifications (10× and 100×), and the data were reported descriptively. Statistical analyses were performed using a one-way analysis of variance (ANOVA) to determine the differences between the three groups ($\alpha = 0.05$ for significance). The sample size is important information about the representative nature of data obtained in the study. Thus, we used the Cohen's method in the IBM SPSS Statistics software (IBM Corporation, Armonk, NY, USA). To obtain an effect size (≥79%) with differences between the means and standard deviations of each group, the calculated minimum sample size for each group resulted in 18 samples. However, 20 samples were used in order to ensure this minimum sampling condition."

Results

The fracture strength values of all groups recorded during quasi-static loading are shown in box plots graph in Figure 3.

Group 1 showed a slight deformation to the hex connector and in the lateral basis of the platform of the implants was observed, with an average strength of 964 ± 187 N (Figure 4).

In Group 2, the mean force was 1618 ± 149 N (Figure 5), that has resulted in a severe deformation in the hex connector and lateral base of the implant platform.

Group 3 showed the highest values of resistance, with an average strength of 2595 ± 161 N. There was a deformation

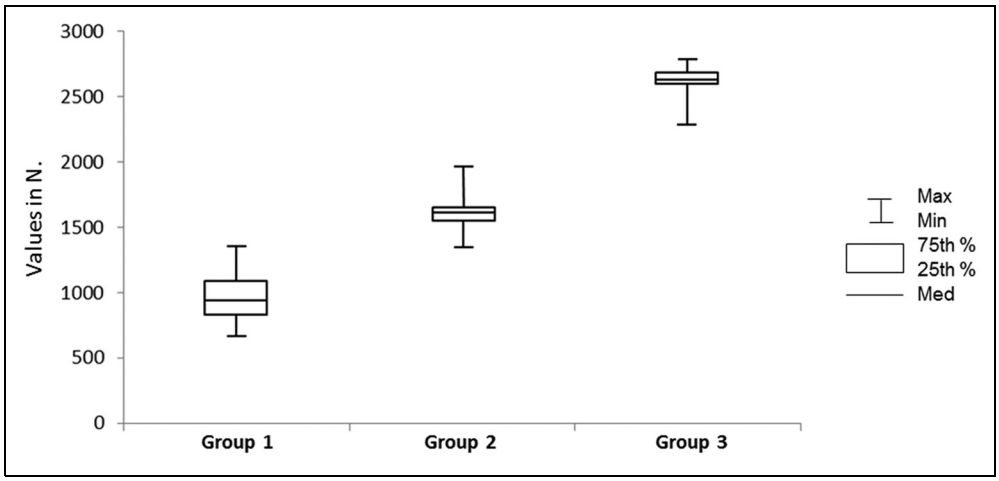

Figure 3. Box plots graph of the implant resistance in the three groups.

in the hexagon and in the lateral basis of the platform of the implants (Figure 6). But no fracture of the implant body or connector was detected.

Significant differences between the three groups were observed using a one-way ANOVA test, where F-cal = 486.1006 was greater than F-crit = 3.1588, with significance set at $P = 1.54 \times 10^{-36}$.

Discussion

Dental tooth fractures are frequent in dogs. Some studies indicate that prevalence is greater than 25%.[15,16] This can reduce the bite capacity of the animal.[17,18] Causal factors are: (A) anatomy of the tooth, (b) parafunctional habits, (c) work related trauma. Regarding the type of fracture, vertical fracture (corono-apical) impairs the potential for clinical treatment of the tooth and extraction is typically performed.[19-21] In these cases, the fractured tooth may be replaced with an implant-supported prosthesis to restore function and aesthetics. Endosseous implants are widely used for treatment in fully or partially edentulous patients. In general, these treatments are considered consistent and predictable, with few failures.[22]

However, studies of dental implants in dogs with clinical veterinary purposes are rare. For this reason, practitioners have been cautious when recommending the clinical use of implants in pets. Among the objections are: (a) low number of occlusal load studies on implants (b) high treatment cost and the (c) number of qualified professionals who are able to render this treatment.[9] Thus the current study examined resistance to static fatigue of implants with different diameters and found significant differences between the groups analyzed. This study was conducted in accordance to ISO 14801:2007 with the set (implant/abutment) at an inclination of 30°, because theoretically it would be the most critical inclination for the implants in function.[12] There are also few studies evaluating the value of bite force in dogs. For example, Lindner et al. analyzed 22 dogs of various races and weights and the result was 13 to 1394 N.[18] In one study, the sample was more uniform, since only one breed of military dog was used and the results were between 480 to 1120 N.[15] The estimated biting forces in domestic dogs was 147 at 3417 N in comparison to post mortem and *in vivo* measurements.[10] Another study measured values of bite forces to be between 375 and 1606 N.[10,11] The variation range of those values is quite large, staying much higher than the maximum average resistance found for the implants of group 1 (964 ± 187 N) and group 2 (1618 ± 149 N). Only the large diameter implants of group 3 (2595 ± 161 N) were closest to the maximum values for the strength reported in dogs. The variability presented in the literature regarding the bite force in dogs may make it difficult to choose the ideal implant diameter. Since the diameter of the implant is also dependent on the width of the available ridge and thickness of the bone on the buccal and lingual sides once the implant has been placed, that is a critical ratio for successful treatment.[4,14]

Some authors have reported that bone loss occurs around the implant above its point of fracture, particularly when molar implants are involved.[23] As corono-apical resorption occurs this produces a high bending stress on the implant because of the loss of bony support. Bone resorption in response to peri-implantitis usually extends to the level of bone corresponding with the terminal end of the abutment screw, where resistance to bending is diminished.[24,25] The effect in this region is strongly related to the magnitude and direction of the stress that is transmitted to the implant. These forces are affected by the nature of the antagonist teeth, the bite force, the number of implants available to support the load and the structure of the prosthesis with respect to the position of the implant.[26]

The fracture load values found for the titanium implants in this study are lower than those reported by Strub and Gerds[27] for implant-metal abutment combinations after chewing simulation. This difference may be explained by differences in methodology. For example, in this study the static load measurements were stopped after a deflection of 4 mm,

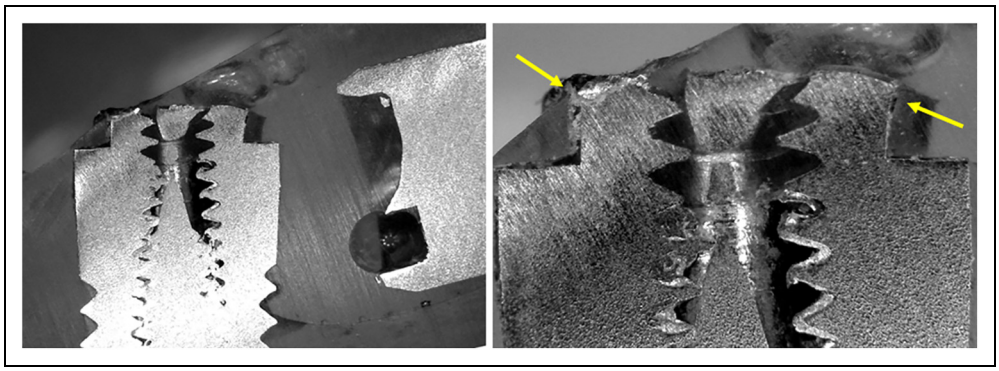

Figure 4. Image of a sample of group 1, where deformation of the external hex connector of the implant (yellow arrows) is observed when loaded to failure of the implant.

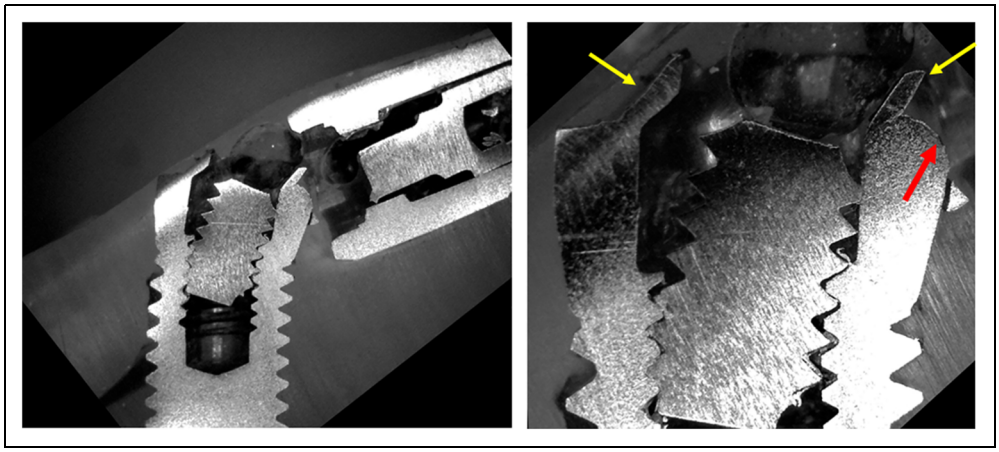

Figure 5. Image of a sample of group 2, where in deformation of the external hex connector (yellow arrows) and the platform base (red arrow) is typical of loading to implant failure.

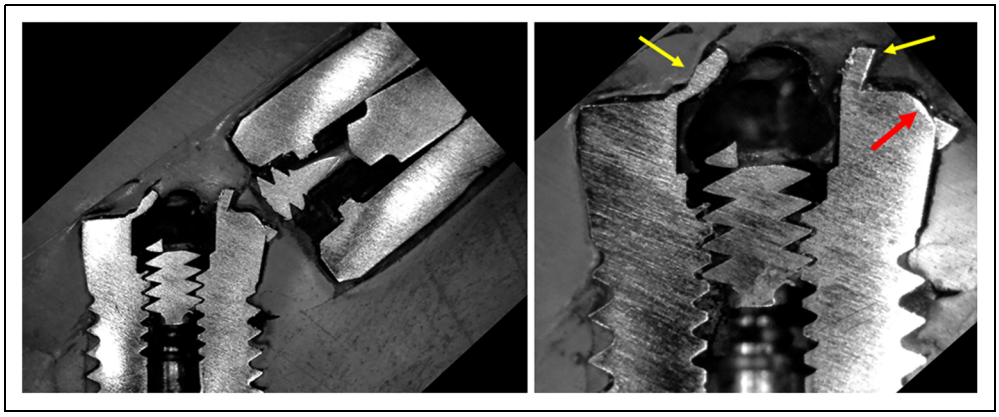

Figure 6. Image of a sample of group 3, where in damage to the external hex connector (yellow arrows) and deformation of the platform base (red arrow) is observed when loaded to implant failure.

whereas another study continued until the authors observed a deviation from the linear slope in the load displacement graph.[27] The fatigue test established by ISO 14801:2007 is extremely important in the evaluation of dental implants.[12] These guidelines serve to analyze the samples mechanically with the intention of mimicking clinical behavior. Our tests using static implant fatigue for different diameters demonstrated that implant strength is critical in implants with small

diameters. These results demonstrate that the diameter of implant and abutment can change the performance and resistance of the system, and suggest that in areas where there is a possibility to use implants with greater diameter, it is an important consideration in the longevity of the repair treatment. Our results can be compared to those obtained by Soukup, et al. who analyzed the possibility of tooth fracture in relation to height and diameter, and found that the fracture resistance was greater the lower this relationship.[28] While other meaningful results have been reported in chewing simulation or fatigue loading studies of implant abutment systems, clinical trials are necessary to validate the results of these investigations as well as the present *in vitro* study.[29-32] Within the limitations of this *in vitro* study, we conclude that the diameter of implants affects the resistance to external forces during the application of non-axial strength and must be observed during the planning of rehabilitation to avoid problems. Selection of the widest implant for that site allowing adequate bone on the buccal and lingual sides between the implant and exterior of the cortical plate will decrease fracture potential of the implant under loading.

Declaration of Conflicting Interests

The author(s) declared no potential conflicts of interest with respect to the research, authorship, and/or publication of this article.

Funding

The author(s) received no financial support for the research, authorship and/or publication of this article.

ORCID iD

Jaime Sarda Aramburú https://orcid.org/0000-0002-0519-0099

References

1. Williams, CA. Endodontics. *Vet Clin North Am Small Anim Pract*. 1986;16(5):875-893.
2. Mele, RE, Caiafa, A, & Kurtzman, GM. Dental implants and incisor bridge placement in a dog. *J Vet Dent*. 2016;33(4):249-258.
3. Mele, RE, Caiafa, A, & Kurtzman, GM. Feline dental implants: long-term follow-up of two cases. *J Vet Dent*. 2017;34(4):268-278.
4. Jackson, BJ. Small-diameter implants: a 7 year retrospective study. *J Oral Implantol*. 2017;43(2):125-129.
5. Natiella, JR. The use of animal models in research on dental implants. *J Dent Educ*. 1988;52(12):792-797.
6. Pearce, AI, Richards, RG, Milz, S, Schineider, E, & Pearce, SG. Animal models for implant biomaterial research in bone: a review. *Eur Cell Mater*. 2007;13(2):1-10.
7. Stadlinger, B, Pourmand, P, Locher, MC, & Schulz, MC. Systematic review of animal models for the study of implant integration, assessing the influence of material, surface and design. *J Clin Periodontol*. 2012;39(12):28-36.
8. Vignoletti, F, & Abrahamsson, I. Quality of reporting of experimental research in implant dentistry. Critical aspects in design, outcome assessment and model validation. *J Clin Periodontol*. 2012;39(12):6-27.
9. Tannenbaum, J, Arzi, B, Reiter, AM, et al. The case against the use of dental implants in dogs and cats. *J Am Vet Med Assoc*. 2013;243(12):1680-1685.
10. Ellis, JL, Thomason, JJ, Kebreab, E, & France, J. Calibration of estimated biting forces in domestic canids: comparison of post-mortem and *in vivo* measurements. *J Anat*. 2008;212(6):769-780.
11. Ellis, JL, Thomason, J, Kebreab, E, Zubair, K, & France, J. Cranial dimensions and forces of biting in the domestic dog. *J Anat*. 2009;214(3):362-373.
12. International Organization for Standardization. *ISO 14801: Dentistry-Implants-Dynamic Fatigue Test for Endosseous Dental Implants*. The Organization; 2007.
13. Rho, JY, Ashman, RB, & Turner, CH. Young's modulus of trabecular and cortical bone material: ultrasonic and microtensile measurements. *J Biomech*. 1993;26(2):111-119.
14. Gehrke, SA, Vianna, MSS, & Dedavid, BA. Influence of bone insertion level of the implant on the fracture strength of different connection designs: an in vitro study. *Clin Oral Investig*. 2014;18-(3):715-720.
15. Hamel, L, & Le Brech, C. Besnier NJ daculsi LG. Measurement of biting-pulling strength developd on canine teeth of military dogs. *J Vet Dent*. 1997;14(2):57-60.
16. Corrêa, HL, Filho, LER, Mello, ES, Carron, RV, & Gioso, MA. Reattachment of tooth fragment: an in vitro study. *J Vet Dent*. 2007;24(2):90-94.
17. Le Brech, C, Hamel, L, Le Nihouannen, JC, & Daculsi, G. Epidemiological study of canine teeth fractures in military dogs. *J Vet Dent*. 1997;14(2):51-55.
18. Lindner, DL, Marretta, SM, Pijanowski, GJ, Johnson, AL, & Smith, CW. Measurement of bite force in dogs: a pilot study. *J Vet Dent*. 1995;12(2):49-52.
19. Niemiec, BA. Extraction techniques. *Top Companion Anim Med*. 2018;23(2):97-105.
20. Legendre, L. Extraction of the lower cuspid, with minimal stress. *Can Vet J*. 1997;38(7):449-450.
21. Goldschmidt, S, Zimmerman, C, Collins, C, Hetzel, S, Ploeg, HL, & Soukup, JW. The influence of force direction on the fracture pattern and fracture resistance of canine teeth in dogs. *J Vet Dent*. 2017;34(1):8-17.
22. Pylant, T, Triplett, RG, Key, MC, & Brunsvold, MA. A retrospective evaluation of endosseous titanium implants in the partially edentulous patient. *Intl J Oral Maxillofacial Imp*. 1992;7(2):195-202.
23. Tagger Green, N, Machtei, EE, Horwitz, J, & Peled, M. Fracture of dental implants: literature review and report of a case. *Implant Dent*. 2002;11(2):137-143.
24. Rangert, B, Krogh, PH, Langer, B, & Van Roekel, N. Bending overload and implant fracture: a retrospective clinical analysis. *Intl J Oral Maxillofacial Imp*. 1995;10(3):326-334.
25. Sanchez-Perez, A, Moya-Villaescusa, MJ, Jornet-Garcia, A, & Gomez, S. Etiology, risk factors and management of implant fractures. *Med Oral Patol Oral CirBucal*. 2010;15(3):e504-e508.
26. Albrektsson, T, Zarb, G, Worthington, P, & Eriksson, AR. The long-term efficacy of currently used dental implants: a review

and proposed criteria of success. *Intl J Oral Maxillofacial Imp*. 1986;1(1):11-25.

27. Strub, JR, & Gerds, T. Fracture strength and failure mode of five different single-tooth implant-abutment combinations. *Int J Prosthodont*. 2003;16(2):167-171.
28. Soukup, JW, Collins, C, & Ploeg, HL. The influence of crown height to diameter ratior on the force to fracture of canine teeth in dogs. *J Vet Dent*. 2015;32(3):155-163.
29. Cibirka, RM, Nelson, SK, Lang, BR, & Rueggeberg, FA. Examination of the implant-abutment interface after fatigue testing. *J Prosthet Dent*. 2001;85(3):268-275.
30. Gratton, DG, Aquilino, SA, & Stanford, CM. Micromotion and dynamic fatigue properties of the dental implant-abutment interface. *J Prosthet Dent*. 2001;85(1):47-52.
31. Khraisat, A, Hashimoto, A, Nomura, S, & Miyakawa, O. Effect of lateral cyclic loading on abutment screw loosening of an external hexagon implant system. *J Prosthet Dent*. 2004; 91(4):326-334.
32. Gehrke, SA. Importance of crown height ratios in dental implants on the fracture strength of different connection designs: an *in vitro* study. *Clin Implant Dent Relat Res*. 2015;17(4):790-797.